THIS COPY IS PROVIDED ON A RESTRICTED BASIS AND IS NOT TO BE USED IN ANY WAY DETRIMENTAL TO THE INTERESTS OF PANDUIT CORP.

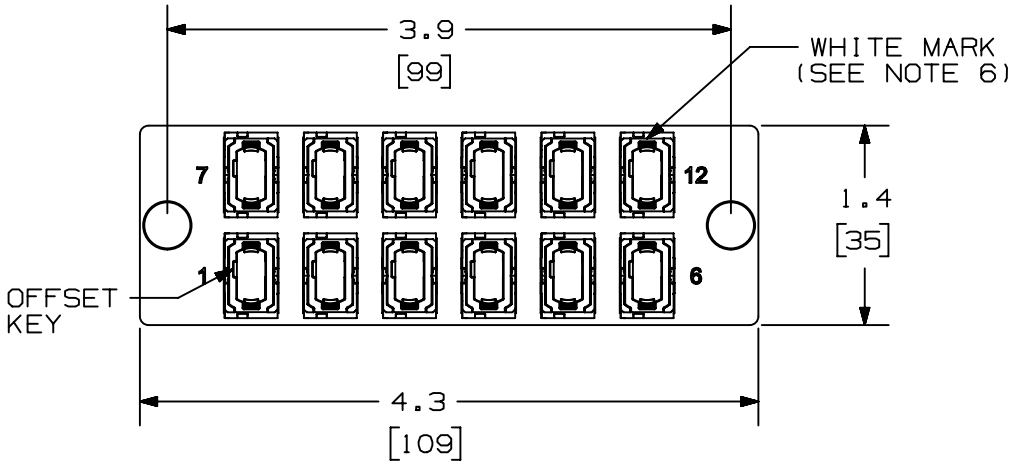

NOTES:
1. SEE CURRENT CATALOG FOR PART NUMBER SUFFIXES TO INDICATE COLOR AND/OR PACKAGE QUANTITIES.
2. SEE CATALOG FOR COMPLETE LIST OF PARTS APPLICABLE FOR USE WITH THIS PRODUCT.
3. MATERIALS:
   A. PLATE: C.R.S. POWDER COATED.
   B. ADAPTER: COMPOSITE WITH METAL CLIP.
   C. ALL MATERIALS AND COMPONENTS USED MEET THE MATERIAL RESTRICTIONS OF RoHS, (EUROPEAN DIRECTIVE 2002/95/EC ON THE RESTRICTION OF HAZARDOUS SUBSTANCES) AS PROPOSED BY THE RoHS TECHNICAL ADAPTATION COMMITTEE.
4. ADAPTERS ARE SUPPLIED WITH TWO DUST PLUGS.
5. DIMENSIONS IN [ ] ARE METRIC.
6. WHITE MARK ON MPO ADAPTER CORRELATES TO FIRST FIBER ON INSTALLED MPO/MTP CONNECTOR.

DUST PLUGS NOT SHOWN FOR CLARITY

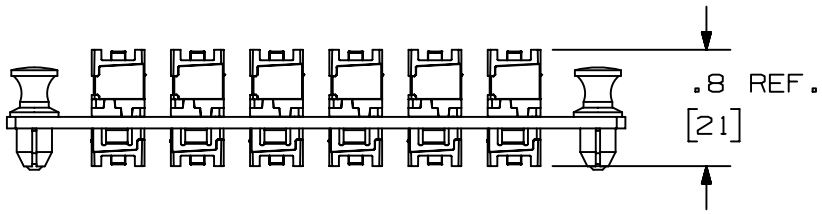

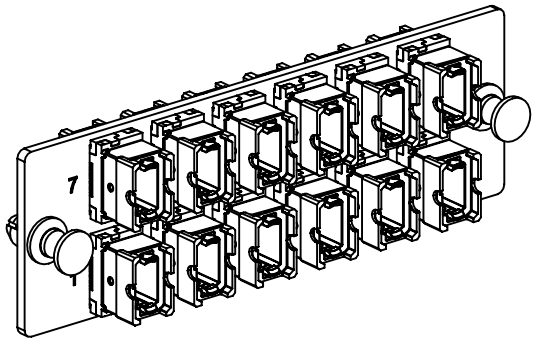

REV	DATE	BY	CHK	APR	DESCRIPTION	ECN
01A	10-11-23	SAT	SSP	EJH	RELEASED TO PRODUCTION	01204EAC-DC

PART NUMBER: FAPH12MBLMPO

TITLE: OPTICOM 12-POSITION HORIZONTAL MPO-16 FIBER ADAPTER PANEL

CUSTOMER DRAWING

ITEM REVISION NAME: 01204EAC/01

DATASET FILE NAME: 01204EAC_DC/01A

UNLESS OTHERWISE SPECIFIED, DIMENSIONAL TOLERANCES ARE: IN [mm]

.X ± .XXX ±
.XX ± ANGLES ±

THIRD ANGLE PROJECTION

MATERIAL:

DRAWING NUMBER: 01204EAC-DC

DRAWN BY	DATE	CHK	SCALE		SIZE
SAT	10-03-23	SSP	NONE	SHT 1 OF 1	A

D10100DA/14