THIS COPY IS PROVIDED ON A RESTRICTED BASIS AND IS NOT TO BE USED IN ANY WAY DETRIMENTAL TO THE INTERESTS OF PANDUIT CORP.

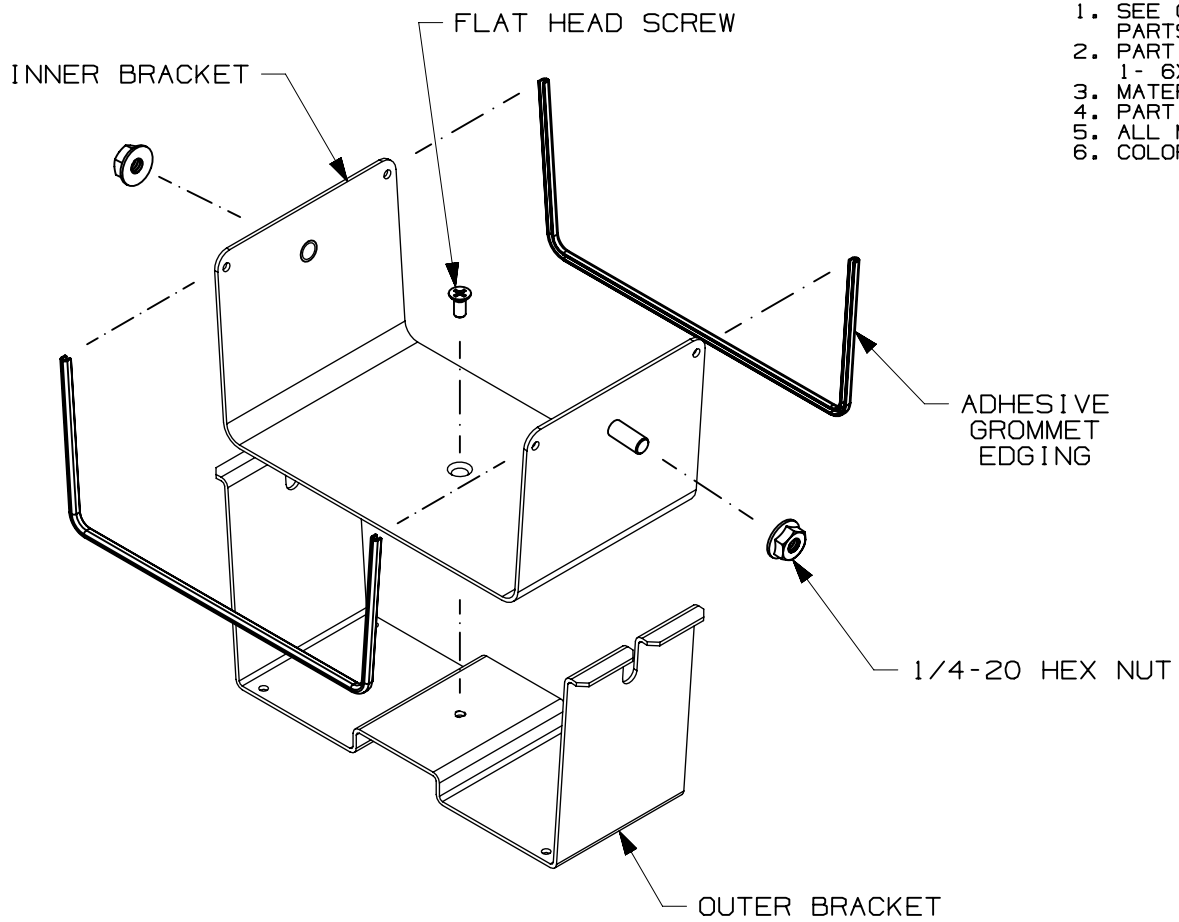

NOTES:
1. SEE CURRENT CATALOG FOR COMPLETE LIST OF PARTS APPLICABLE FOR USE WITH THIS PRODUCT.
2. PART INCLUDES:
   1- 6X4 COUPLER
3. MATERIALS: STEEL
4. PART WEIGHT: 1.5LBS (.7kg)
5. ALL MATERIALS USED RoHS COMPLIANT
6. COLOR: BLACK

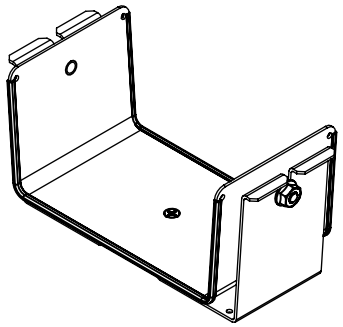

REV	DATE	BY	CHK	APR	DESCRIPTION	ECN
00A	01-10-23	SAT	ACBR	SJMO	INITIAL RELEASE	01160EAB-DC

TITLE
FIBERRUNNER EXPANSION SPLICE KIT 6X4 (FRESPKT6)
CUSTOMER DRAWING

ITEM REVISION NAME: 01160EAB/00

DATASET FILE NAME: 01160EAB_DC/00A

UNLESS OTHERWISE SPECIFIED, DIMENSIONAL TOLERANCES ARE: IN [mm]
.X ± .XXX ±
.XX ± .05 [1.3] ANGLES ± 5 °
THIRD ANGLE PROJECTION

PART NUMBER: FRESPKT6

DRAWING NUMBER: 01160EAB-DC

DRAWN BY	DATE	CHK	SCALE	SHT 1 OF 1	SIZE
SAT	01-10-23	ACBR	NONE		A