FIBERRUNNER 12x4, 6x4, & 4x4 ADJUSTABLE "C" BRACKETS FOR USE WITH PANDUIT FIBERRUNNER 12x4, 6x4, & 4x4 ROUTING SYSTEMS

Part Number(s): FR12ACB12N, FR12ACB58N, FR6ACB12N, FR6ACB58N

© Panduit Corp. 2022

INSTALLATION INSTRUCTIONS

RW136C

Printed in U.S.A.

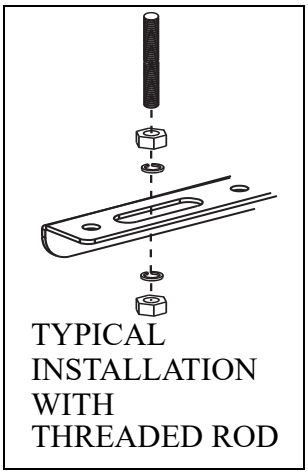

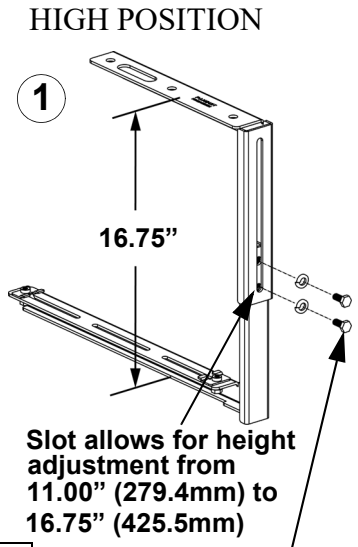

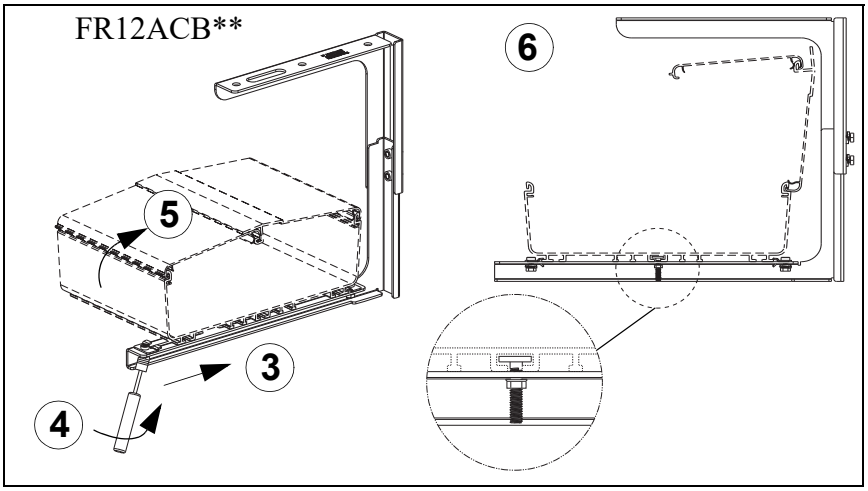

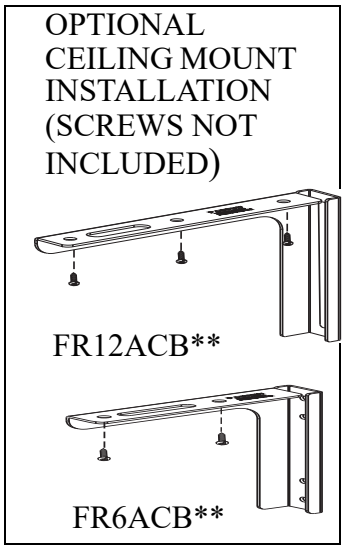

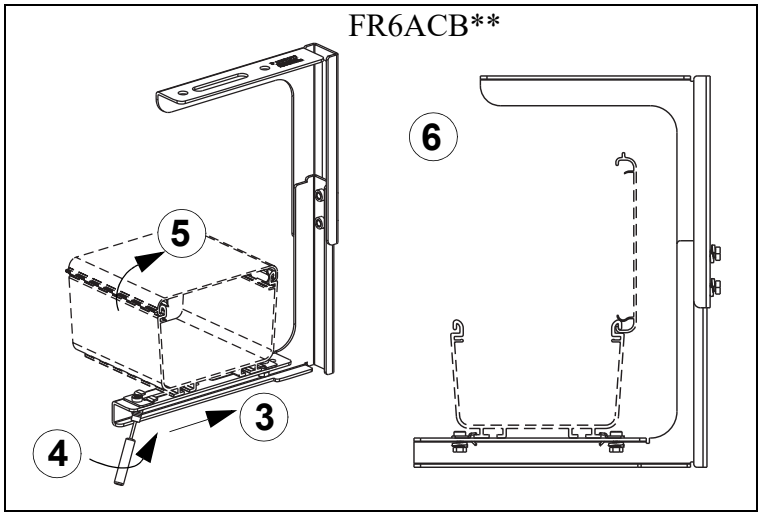

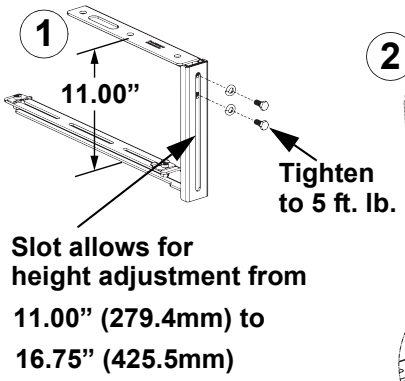

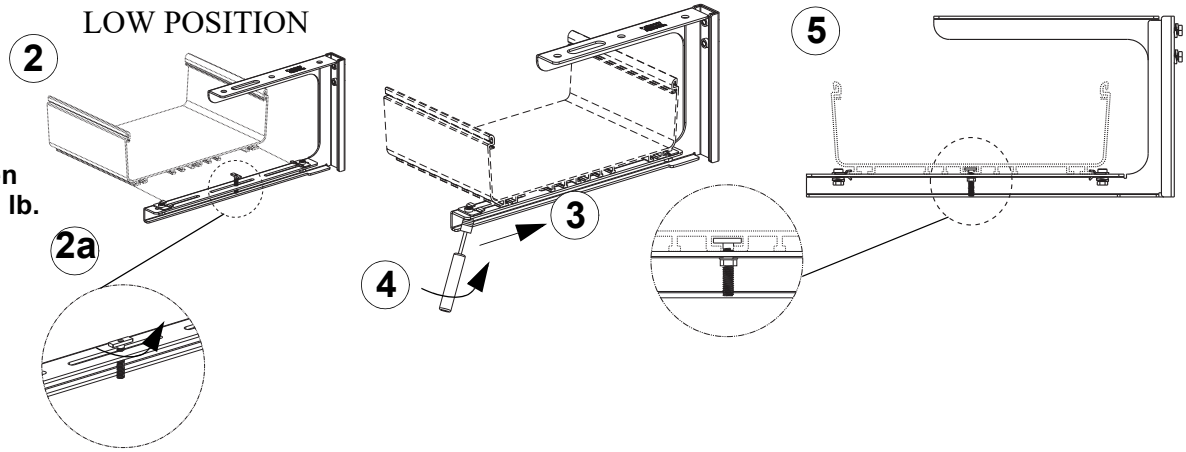

For Instructions in Local Languages and Technical Support:
www.panduit.com/resources/install_maintain.asp

www.panduit.com

E-mail:
techsupport@panduit.com

Fax:
866-405-6654