THIS COPY IS PROVIDED ON A RESTRICTED BASIS AND IS NOT TO BE USED IN ANY WAY DETRIMENTAL TO THE INTERESTS OF PANDUIT CORP.

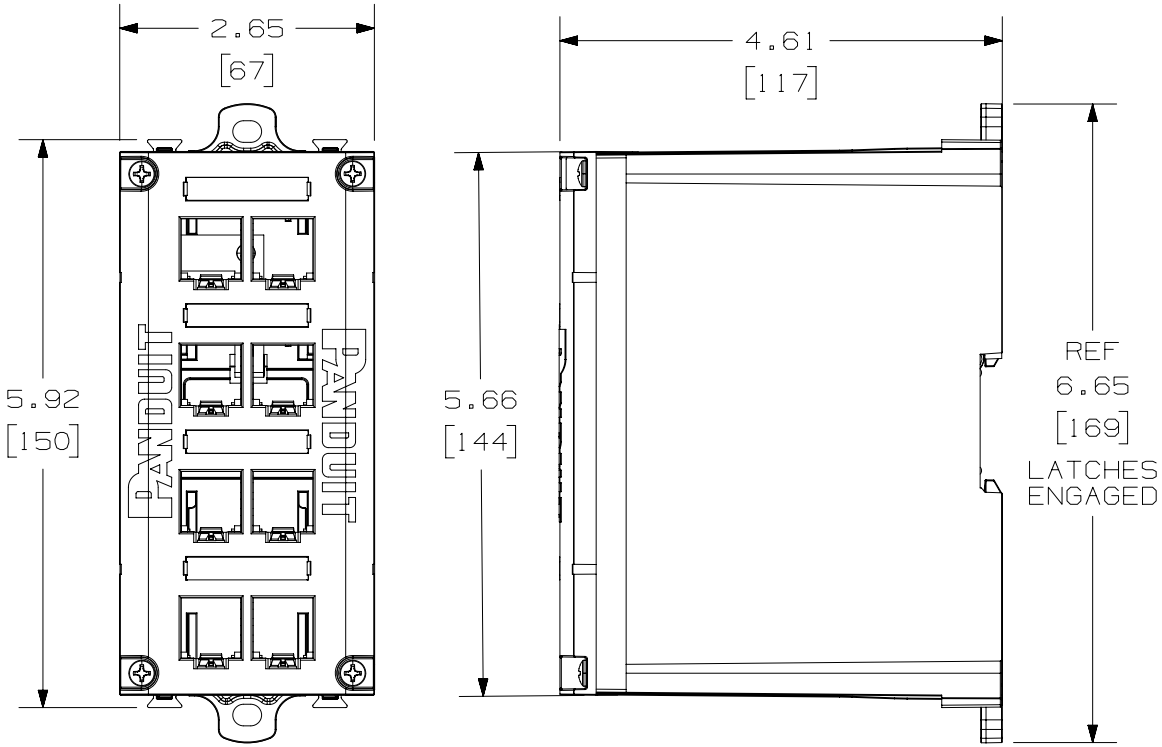

PANDUIT P/N	WEIGHT
CDPP8RG-S	0.55 LB/PCS [249 g/PCS]

NOTES:
1. VISIT OUR ON-LINE CATALOG AT WWW.PANDUIT.COM FOR A LIST OF CURRENT PARTS APPLICABLE FOR USE WITH THIS PRODUCT.
2. DIMENSIONS IN [ ] ARE METRIC.
3. WEIGHT: 0.55 LBS (249 g)
4. MATERIALS:
   A. ENCLOSURE: COMPOSITE PLASTIC WITH METAL FASTENERS.
   B. PRODUCT MUST COMPLY TO PANDUIT SPECIFICATION FOR CHEMICAL SUBSTANCES TO BE CONTROLLED IN PANDUIT PRODUCT AND PACKAGING C2-0834 AND APPENDICES C2-0835
4. PART INCLUDES:
   - (1) BASE ASSEMBLY
   - (1) FACE PLATE
   - (1) BASE ASM GROUND
   - (1) FACEPLATE GROUND
   - (4) ULTIMATE ID LABELS AND COVERS
   - (4) 6-32 X 3/8" PHILLIPS DRIVE SCREWS
   - (1) 3-24 X 3/16" PHILLIPS ROUNDED HEAD SCREW - STAINLESS STEEL

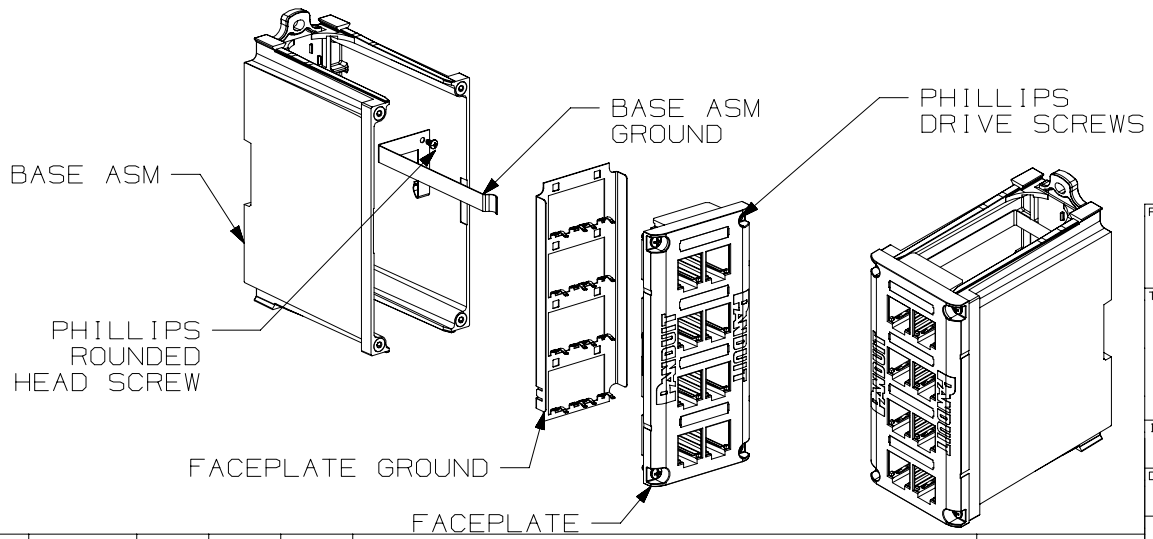

REV	DATE	BY	CHK	APR	DESCRIPTION	ECN
00A	1/14/19	JBO	MGH	KGA	INITIAL RELEASE	00097EBA

PART NUMBER: CDPP8RG-S

TITLE: SHIELDED 8 PORT DIN MOUNT PATCH PANEL

CUSTOMER DRAWING

ITEM REVISION NAME: 00097EBA/00

DATASET FILE NAME: 00097EBA_DC/00A

THIRD ANGLE PROJECTION

PANDUIT

MATERIAL: N/A

DRAWING NUMBER: 00097EBA_DC

DRAWN BY	DATE	CHK	SCALE	SHEET	SIZE
JBO	1/14/19	MGH	NONE	SHEET 1 OF 1	A

A-SIZE CUSTOMER