THIS COPY IS PROVIDED ON A RESTRICTED BASIS AND IS NOT TO BE USED IN ANY WAY DETRIMENTAL TO THE INTERESTS OF PANDUIT CORP.

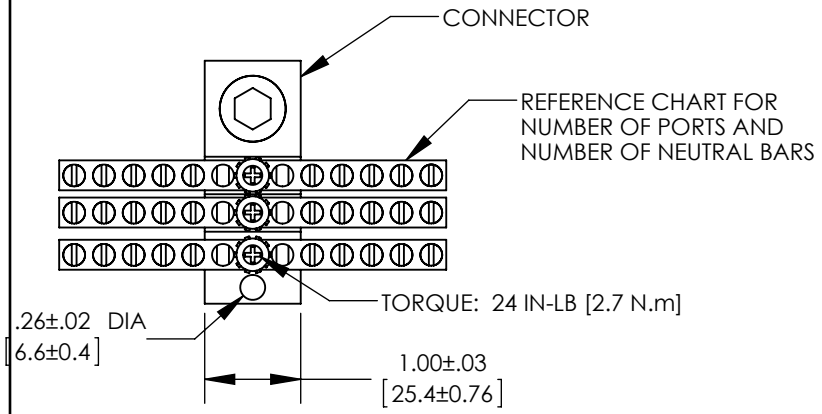

NOTES:

1. MATERIAL:
   -BAR- ALUMINUM, TIN PLATED
   -BAR HARDWARE - STEEL, ZINC PLATED
   -CONNECTOR - ALUMINUM, TIN PLATED
   -CONNECTOR SET SCREW - ALUMINUM, TIN PLATED
2. UL486A-UL486B LISTED/CSA CERTIFIED C22.2 No. 65.
3. FOR COPPER AND ALUMINUM CONDUCTORS.
4. VOLTAGE RATINGS: 600V MAX. BUILDING WIRE
   1000V MAX. SIGNS AND FIXTURES
5. TEMPERATURE RATING: 90°C (CU9AL)
6. DIMENSIONS IN PARENTHESIS ARE MILLIMETERS
7. SEE PACKAGE LABEL FOR TIGHTENING TORQUE SPECIFICATIONS.
8. SEE www.PANDUIT.COM FOR PACKAGE QUANTITIES

LISTED CERTIFIED

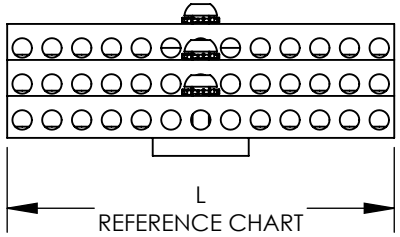

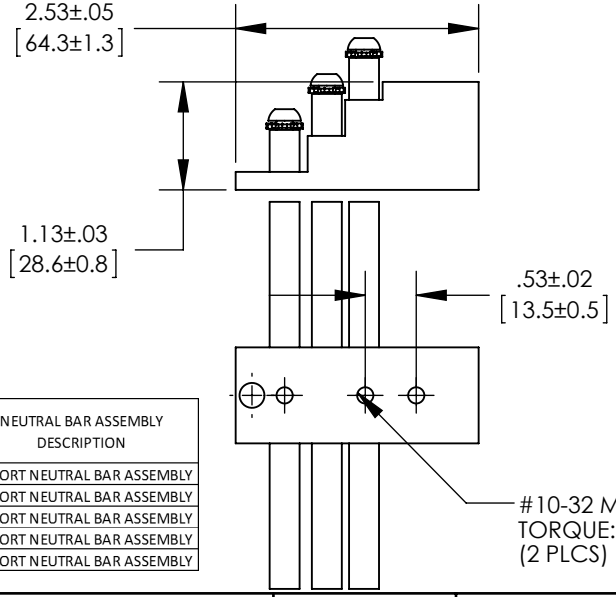

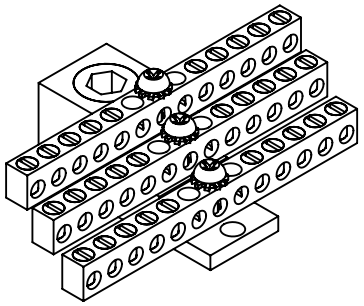

PANDUIT PART NUMBER	L ± .060 [1.5]	COPPER/ALUMINUM CONDUCTOR RANGE NEUTRAL BAR	COPPER/ALUMINUM CONDUCTOR RANGE CONNECTOR	NEUTRAL BAR DESCRIPTION (QTY OF BARS)	NEUTRAL BAR ASSEMBLY DESCRIPTION
NBA350-12	4.77 [121.3]	14 - 4 AWG SOL/STR	6 - 350 kcmil SOL/STR	12 PORT NEUTRAL BAR (1)	12 PORT NEUTRAL BAR ASSEMBLY
NBA350-24				12 PORT NEUTRAL BAR (2)	24 PORT NEUTRAL BAR ASSEMBLY
NBA350-30	4.15 [105.4]			10 PORT NEUTRAL BAR (3)	30 PORT NEUTRAL BAR ASSEMBLY
NBA350-36	4.77 [121.3]			12 PORT NEUTRAL BAR (3)	36 PORT NEUTRAL BAR ASSEMBLY
NBA350-42	5.39 [136.9]			14 PORT NEUTRAL BAR (3)	42 PORT NEUTRAL BAR ASSEMBLY

REV	DATE	BY	CHK	APR	DESCRIPTION	ECN
00	12/15	JHNU	BKR	RGB	DRAWING RELEASED	13J051CO-DC

TITLE
NEUTRAL BAR ASSEMBLY
(NBA350 SERIES)
CUSTOMER DRAWING

ITEM REVISION NAME: 13J051CO/00

DATASET FILE NAME: 13J051CO-DC/00.SLDDRW

PANDUIT

UNLESS OTHERWISE SPECIFIED,
DIMENSIONAL TOLERANCES ARE: IN [mm]
.X ± .XXX ±
.XX ± .02 [0.5] ANGLES ±

THIRD ANGLE PROJECTION

MATERIAL: SEE NOTES

DRAWING NUMBER: 13J051CO-DC

DRAWN BY	DATE	CHK	SCALE	SHEET	SIZE
JHNU	12/15	BKR	N/A	SHEET 1 OF 1	A